TGE 308

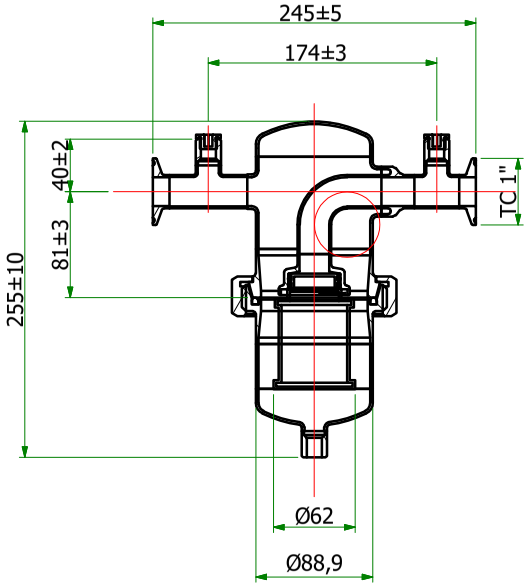


TGE 314

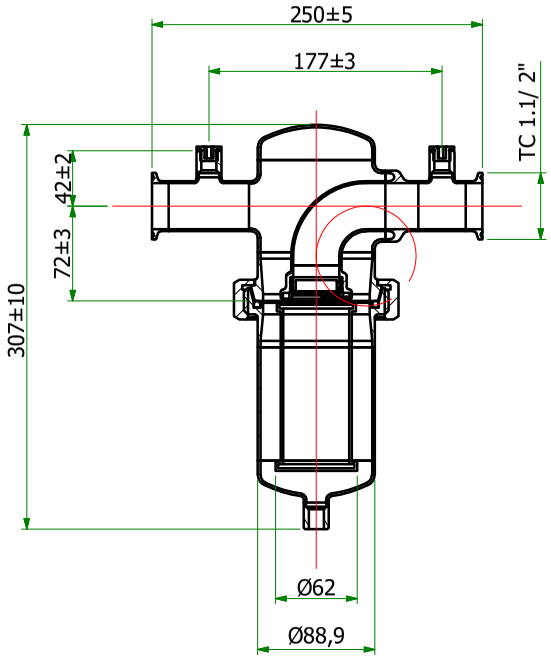


TGE 316

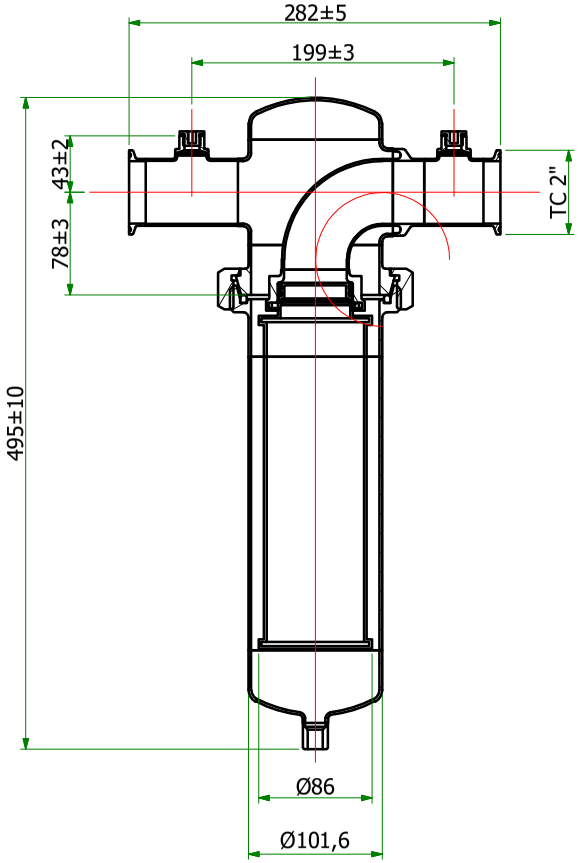


TGE 318

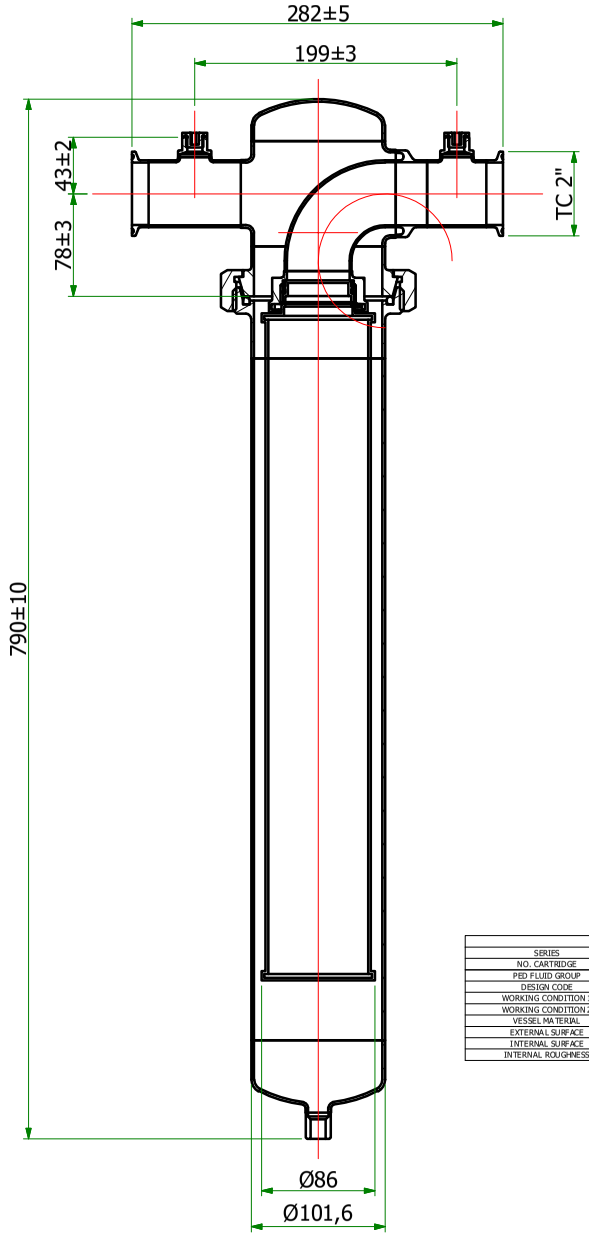


| TECHNICAL DATA | |
|---|---|
| SERIES | TGE |
| NO. CARTRIDGE | 1 |
| PED FLUID GROUP | GR.1 - GAS |
| DESIGN CODE | EN 13445 |
| WORKING CONDITION 1 | PS +0/+16 bar TS +0/+80°C |
| WORKING CONDITION 2 | PS +0/+20 bar TS +0/+55 °C |
| VESSEL MATERIAL | 1.4404 (AISI316L) |
| EXTERNAL SURFACE | MIRROR POLISHED |
| INTERNAL SURFACE | FINE BRUSHED |
| INTERNAL ROUGHNESS | 0.8µm |

| DATA SHEET | | | |
|---|---|---|---|
| IN-OUT CONNECTION | CARTR. HEIGHT | INTERNAL VOLUME [l] | PED CATEGORY |
| TGE 308 - TC 1" | 2.5" | 1.3 | Art. 4.3 |
| TGE 314 - TC 1" 1/2 | 5" | 1.6 | I |
| TGE 316 - TC 2" | 10" | 3 | II |
| TGE 318 - TC 2" | 20" | 5.2 | II |

**Parker Hannifin Manufacturing S.r.l.**

Parker Hiross — **Gas Separation and Filtration Division EMEA** - Strada Zona Industriale,4- 35020 - S. Angelo di Piove (PD) -ITALY

| | | | |
|---|---|---|---|
| TOLERANCE: UNI EN 22768 - mK, UNI EN ISO 13920 - AE, DIN 28005, ISO 1302 | ECO: ECO-XXXXXXX — Checked/Approved by ENOVIA process | DESCRIPTION: FILTER TGE — type 308-314-316-318 CLAMP ASME | |
| ISO 128-30 Method 1 | AUTHOR: MS837398 / DATE: 21/06/2022 | DRAWING NO.: H39AL0318L001 | REV.: - |
| UNITS: MM | SCALE: - / MASS: kg | | |
| | MATERIAL: | ODE Cod. Art. (Optional) | FORMAT: A4 / SHEET: 1 / 1 |

This document contains information that is confidential, proprietary and/or trade secret information of Parker Hannifin Corporation. Any reproduction, disclosure or other use without express written consent of Parker Hannifin Corporation is strictly prohibited. This document is provided on the understanding that the information contained herein will not be used for any purpose other than that for which it is expressly provided nor will it be used to create an order for any product or service unless such order is expressly agreed to by Parker Hannifin Corporation in writing. Parker Hannifin Corporation makes no representations or warranties with respect to the information contained herein, including, but not limited to, any warranties of merchantability and fitness for a particular purpose, all of which are expressly disclaimed. Parker Hannifin Corporation assumes no liability for any damages arising from the use of, or reliance on, the information contained herein. COPYRIGHT PARKER HANNIFIN CORPORATION, 2021. ALL RIGHTS RESERVED. Parker, Hiross are registered trademarks of Parker Hannifin Corporation.